111162-00

MODEL	A				VOLUME			DOME VOLUME			WEIGHT	
	mm	inch	+/- mm	+/- inch	liters	U.S.gal	cubic FT	liters	U.S.gal	cubic FT	Kg	LBS
16x65	1671	65.79	6	.24	194	51.3	6.86	9.15	2.42	0.32	18.65	41.03
16x52	1341	52.80	6	.24	153	40.4	5.41	9.15	2.42	0.32	15.75	34.69
16x28	735	28.94	4	.16	76	20.08	2.69	9.15	2.42	0.32	10.46	23.02

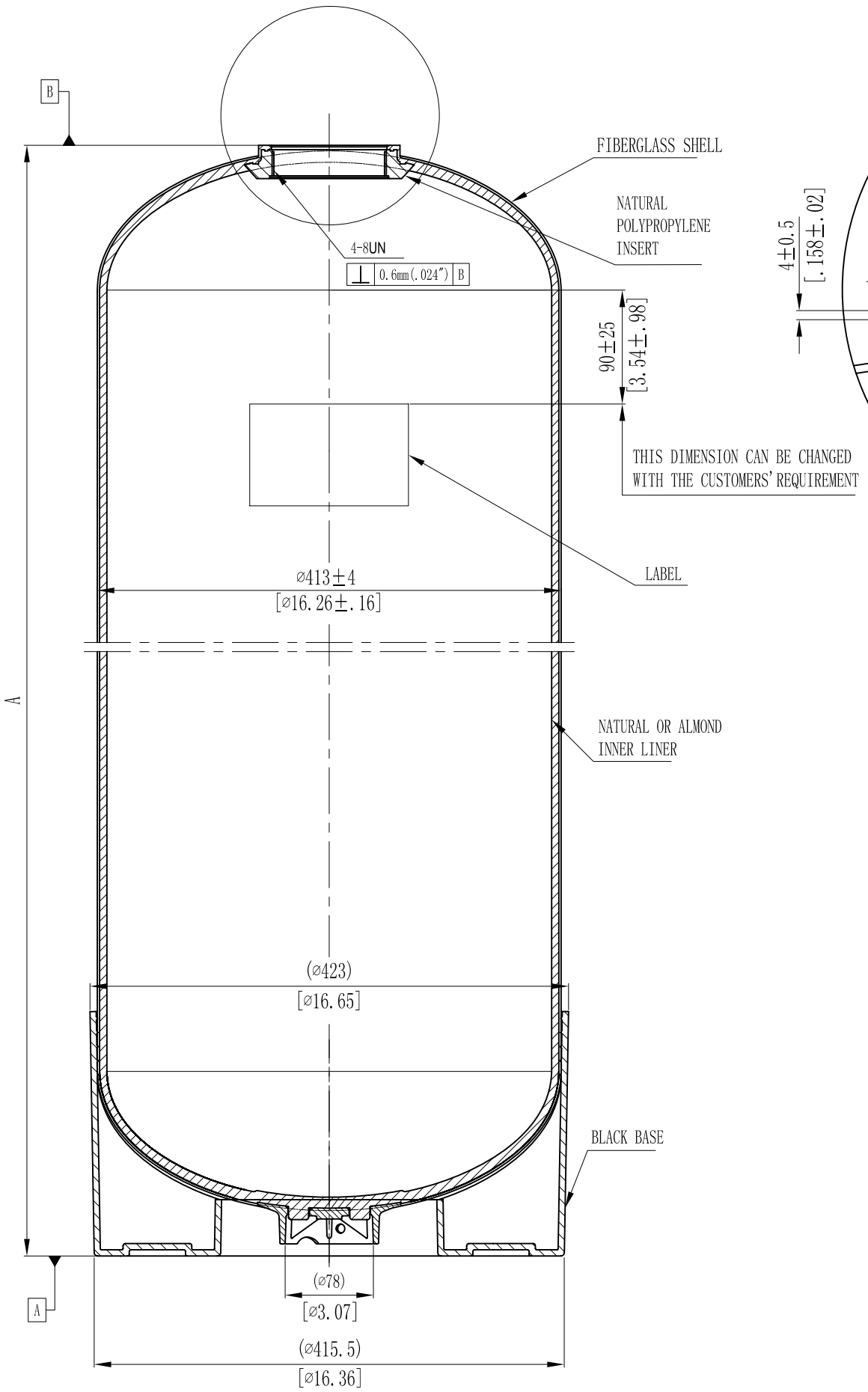

1:2.5

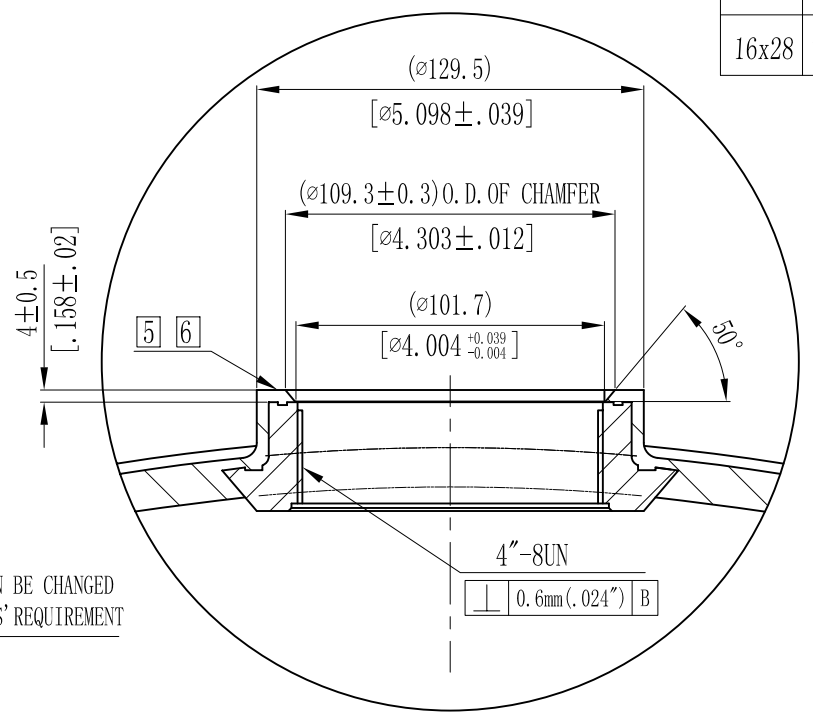

NOTES:

1. TANK MUST MEET ALL APPLICABLE SPECIFICATIONS OF NSF/ANSI 044 STANDARD, LATEST REVISION.
2. OPERATING SPECIFICATIONS:
   - A. MAXIMUM WORKING PRESSURE - 150 PSI(10.5BAR)
   - B. TEMPERATURE RANGE - 34-120° F(1-49℃)
   - C. MAXIMUM VACUUM - 5"Hg(127mm Hg)
3. VISUAL LINER INSPECTION
   - A. NO MORE THAN 10 INTERNAL OR EXTERNAL BLEMISHES OR BURNT DEBRIS.
   - B. NO INTERNAL OR EXTERNAL BLEMISHES OR BURNT DEBRIS LARGER THAN 3×3mm.
   - C. NO INTERNAL BLEMISHES OR BURNT DEBRIS ALLOWED.
4. ALL GLASS STRANDS FROM FIBERGLASS LINER TO BE BONDED AND COVERED.

[5]. SURFACE TO BE FREE OF NICKS, SCRATCHES, RESIN AND GLASS.

[6]. SURFACE FINISH.

7. DIMENSIONS IN PARENTHESIS ARE REFERENCE ONLY.
8. DIMENSIONS IN SQUARE PARENTHESIS ARE INCH UNIT.
9. USING A STANDARD LEVEL WITH TANK POSITIONED ON A LEVEL SURFACE, DATUM B TO BE PARALLEL WITH DATUM A. BUBBLE OF LEVEL MUST FALL COMPLETELY WITHIN LINES WHEN MEASURED AT 90° INTERVALS.

VERSION NO.	DESCRIPTION OF CHANGES:	SIGNATURE	DATE
6	THIS DRAWING IS UPDATED COMPLYING WITH THE CHINESE VERSION		2008/07/21

REFERENTIAL PLASTIC SHRINKAGE (IF NECESSARY):

SIGNATURE	NAME	DATE
DESIGN		
INSPECTION		
APPROVAL		

WAVE CYBER (SHANGHAI) CO., LTD.

SCALE 1 : 5	MATERIAL	MODEL	
		DESCRIPTION 16"(4") FRP PRESSURE VESSEL	
QUANTITY	SMOOTHNESS		
PROJECTION	COMPUTER CODE	DRAWING NO. 111162-00	VERSION NO. 6
DO NOT MEASURE THE DIMENSIONS.	UNIT: MM	TOTAL PAGE: 1	

THIS PRODUCT DRAWING CAN NOT BE COPIED AND/OR USED WITHOUT PRIOR WRITTEN APPROVAL OF WAVE CYBER.