142070

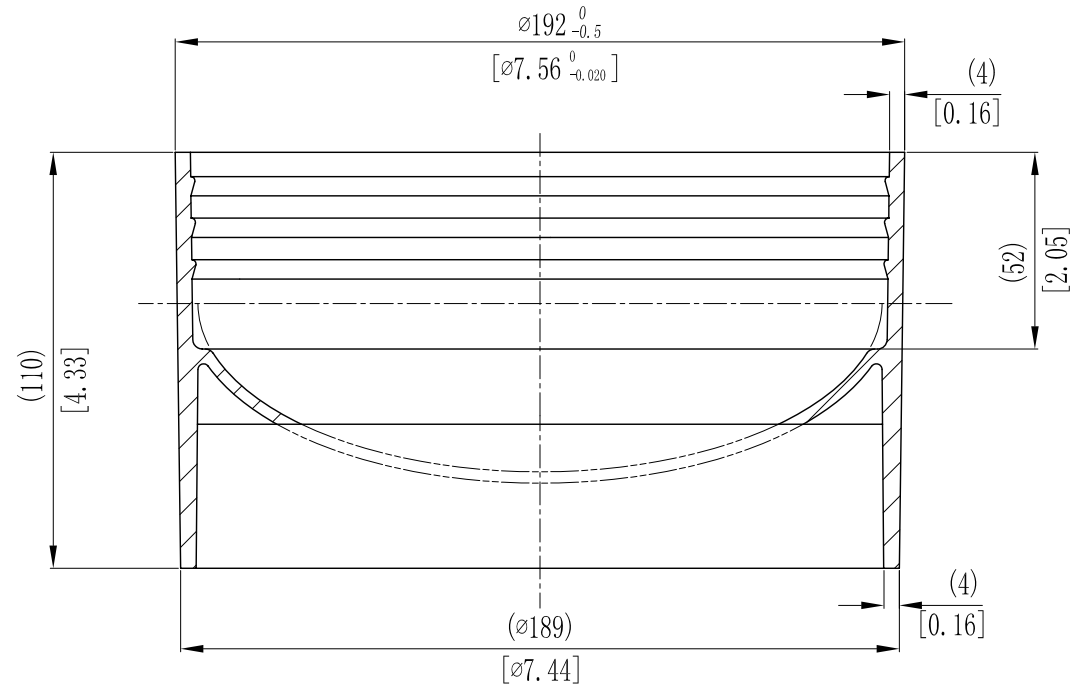

TECHNICAL REQUIREMENT:
DIMENSIONS IN ( ) ARE REFERENCE ONLY.
DIMENSIONS IN [ ] ARE INCH UNIT.

VERSION NO.	DESCRIPTION OF CHANGES:	SIGNATURE	DATE
0	THIS DRAWING UPDATED COMPLYING WITH THE CHINESE VERSION		09/11/2007

REFERENTIAL PLASTIC SHRINKAGE (IF NECESSARY):

SIGNATURE	NAME	DATE
DESIGN		
INSPECTION		
APPROVAL		

THIS PRODUCT DRAWING CAN NOT BE COPIED AND/OR USED WITHOUT PRIOR WRITTEN APPROVAL OF WAVE CYBER.

WAVE CYBER (SHANGHAI) CO., LTD.

SCALE	MATERIAL	MODEL	
1 : 2	PP	DESCRIPTION	
QUANTITY	SMOOTHNESS 0.3kg	7″BASE	
PROJECTION	COMPUTER CODE 10008	DRAWING NO. 142070	VERSION NO. 0

DO NOT MEASURE THE DIMENSIONS. | UNIT: MM | TOTAL PAGE: 1